SZ8881.01-0007 6.7

SZ8881.01-0001 6.7

SZ8881.01-0002 6.8

SZ8881.01-0003 6.8

SZ8881.01-0004 6.9

SZ9400 6.20

SZ8881.01-0007 Tapping unit

S-Former Z

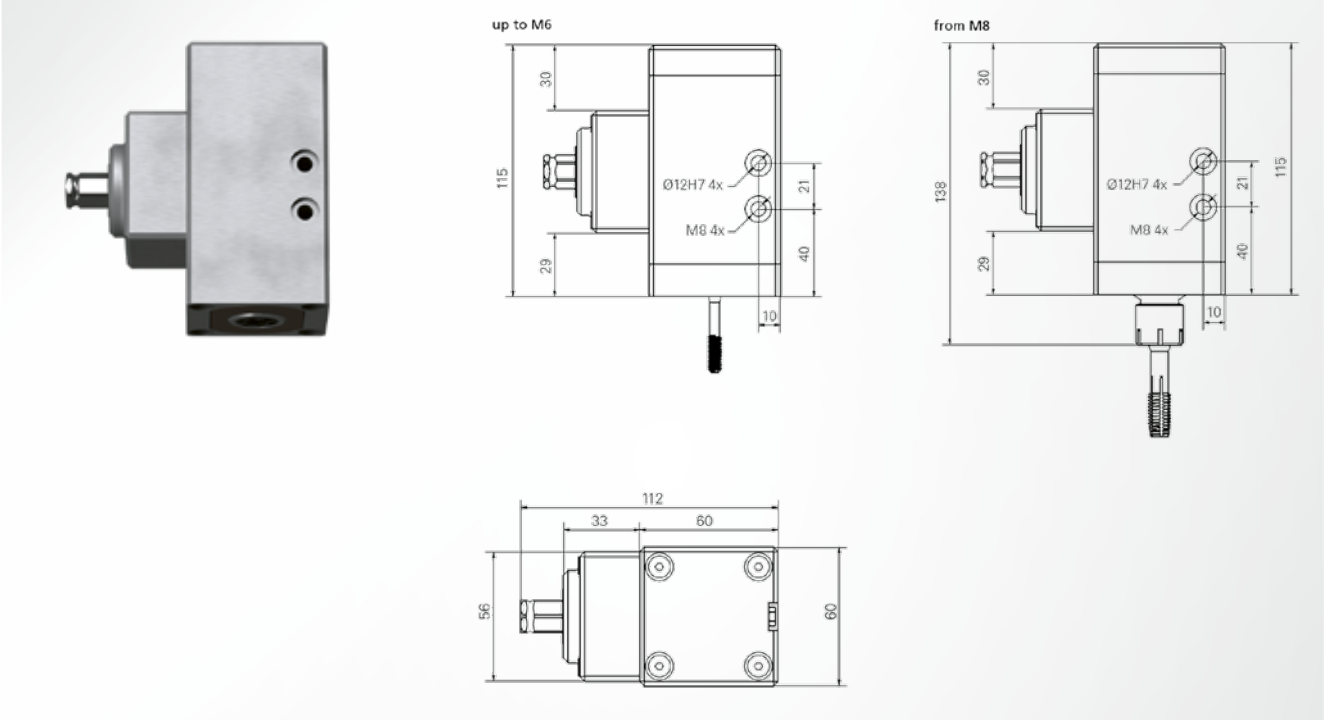

Note
Guide cartridge (SZ8881.01-0004) must also be specified for the tapping unit

Item number
SZ8881.07-0007

SZ8881.01-0001 Cardan shaft

S-Former Z

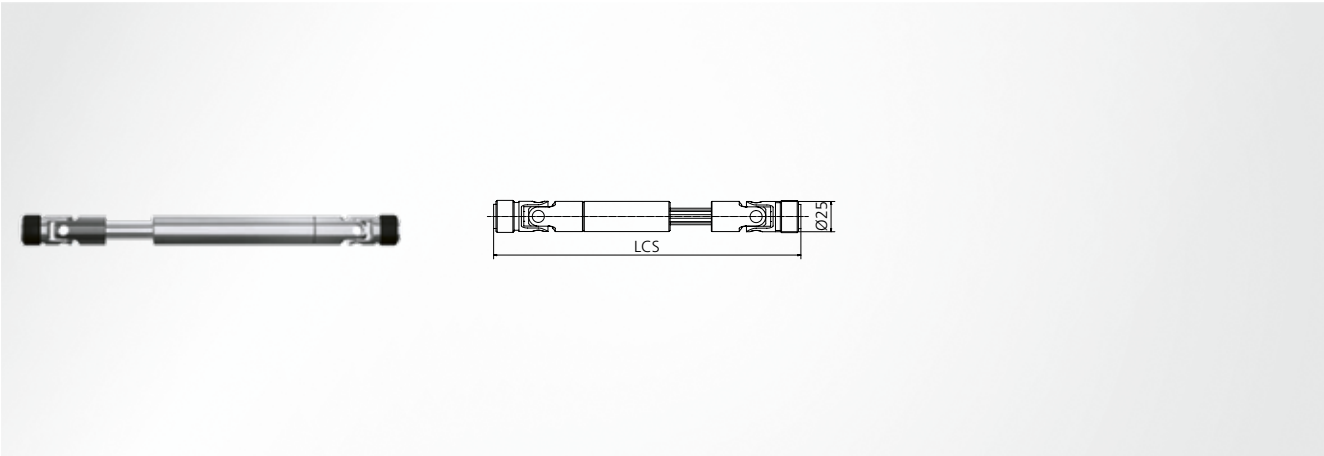

Note
LCS = length of the Cardan shaft

Item number
SZ8881.01-0001

SZ8881.01-0002 Gear

S-Former Z

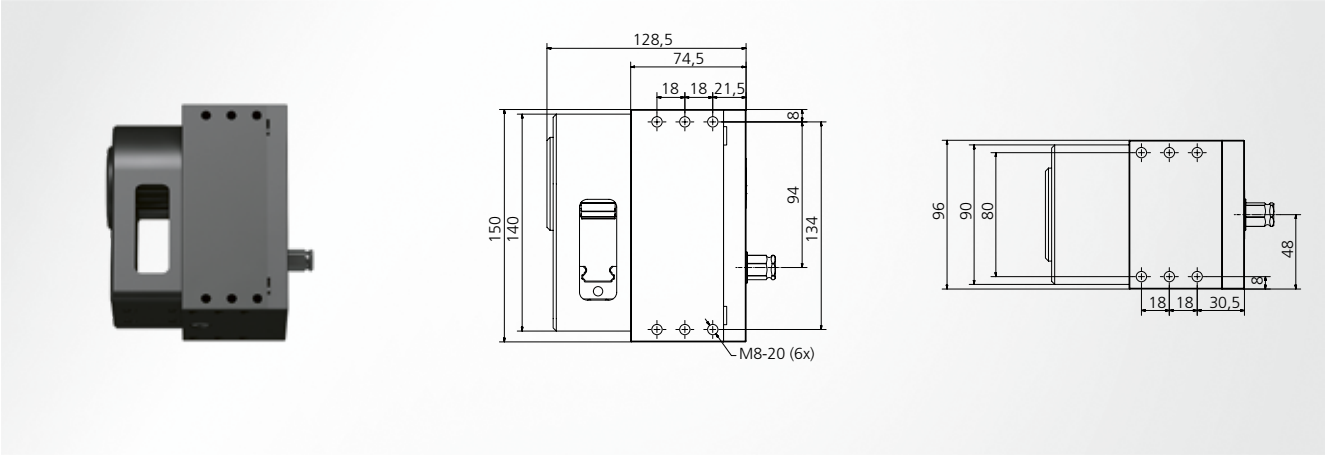

Item number
SZ8881.01-0002

SZ8881.01-0003 Gear rod

S-Former Z

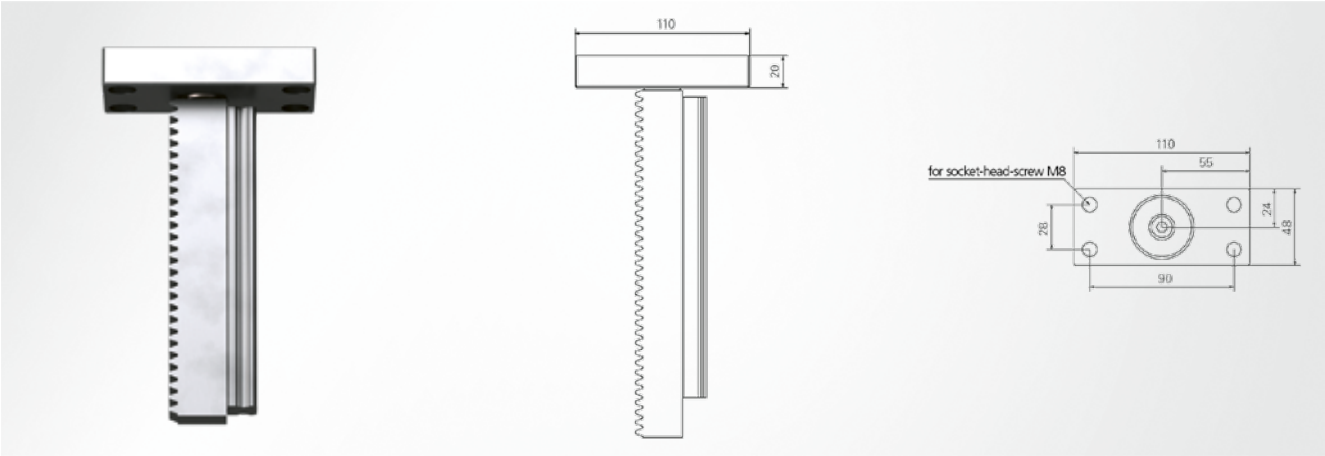

Item number
SZ8881.01-0003

SZ8881.01-0004 Guide cartridge

S-Former Z

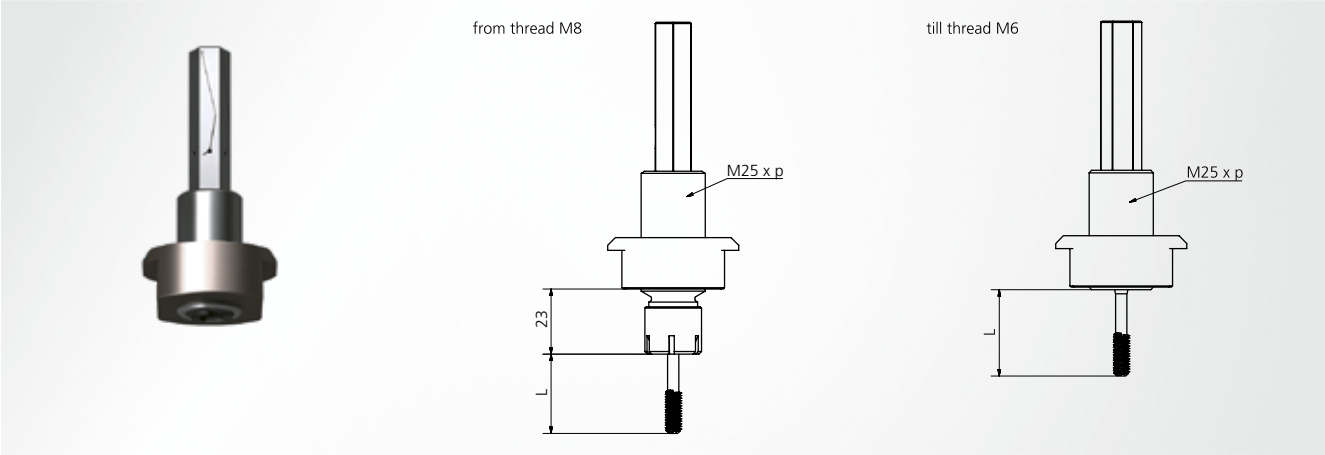

Note
P = roll tap pitch

Item number
SZ8881.01-0004

Thread	Guide cartridge	P	L
M4	M 25 x	0.70	22
M5	M 25 x	0.80	25
M6	M 25 x	1.00	30
M8	M 25 x	1.25	35
M10	M 25 x	1.50	40
M12	M 25 x	1.75	36

SZ9400 Roll tap

DIN 2174

Note

Carbide tap deliverable upon request

Coating

TIN – Tensile strengths up to 1000 N/mm², good sliding characteristics and wear-resistant; **TICN** – Tensile strengths > 800 N/mm², high hardness and wear resistance when toughness properties are good

Thread	core hole	Tolerance	Coating	Item number
M3 x 0.5	2.80	HX	TIN	SZ9400 **03 x 0.5B2**
			TICN	SZ9400 **03 x 0.5C2**
M4 x 0.7	3.70	HX	TIN	SZ9400 **04 x 0.7B2**
			TICN	SZ9400 **04 x 0.7C2**
M5 x 0.8	4.65	HX	TIN	SZ9400 **05 x 0.8B2**
			TICN	SZ9400 **05 x 0.8C2**
M6 x 0.5	5.80	HX	TIN	SZ9400 **06 x 0.5B2**
			TICN	SZ9400 **06 x 0.5C2**
M6 x 1	5.55	HX	TIN	SZ9400 **06 x 1.0B2**
			TICN	SZ9400 **06 x 1.0C2**
M8 x 1	7.55	HX	TIN	SZ9400 **08 x 1.0B2**
			TICN	SZ9400 **08 x 1.0C2**
M8 x 1.25	7.45	HX	TIN	SZ9400 **08 x 1.25B2**
			TICN	SZ9400 **08 x 1.25C2**
M10 x 1	9.55	HX	TIN	SZ9400 **10 x 1.0B2**
			TICN	SZ9400 **10 x 1.0C2**
M10 x 1.5	9.35	HX	TIN	SZ9400 **10 x 1.5B2**
			TICN	SZ9400 **10 x 1.5C2**
M12 x 1	11.55	HX	TIN	SZ9400 **12 x 1.0B2**
			TICN	SZ9400 **12 x 1.0C2**
M12 x 1.25	11.45	HX	TIN	SZ9400 **12 x 1.25B2**
M12 x 1.5	11.35	HX	TIN	SZ9400 **12 x 1.5B2**
			TICN	SZ9400 **12 x 1.5C2**
M12 x 1.75	11.20	HX	TIN	SZ9400 **12 x 1.75B2**
			TICN	SZ9400 **12 x 1.75C2**
UNF 7/16"-20	9.90	2B	TIN	SZ9400 **7/16"-20**